TESLA

Humbucker, Series/Split/Parallel/Phase

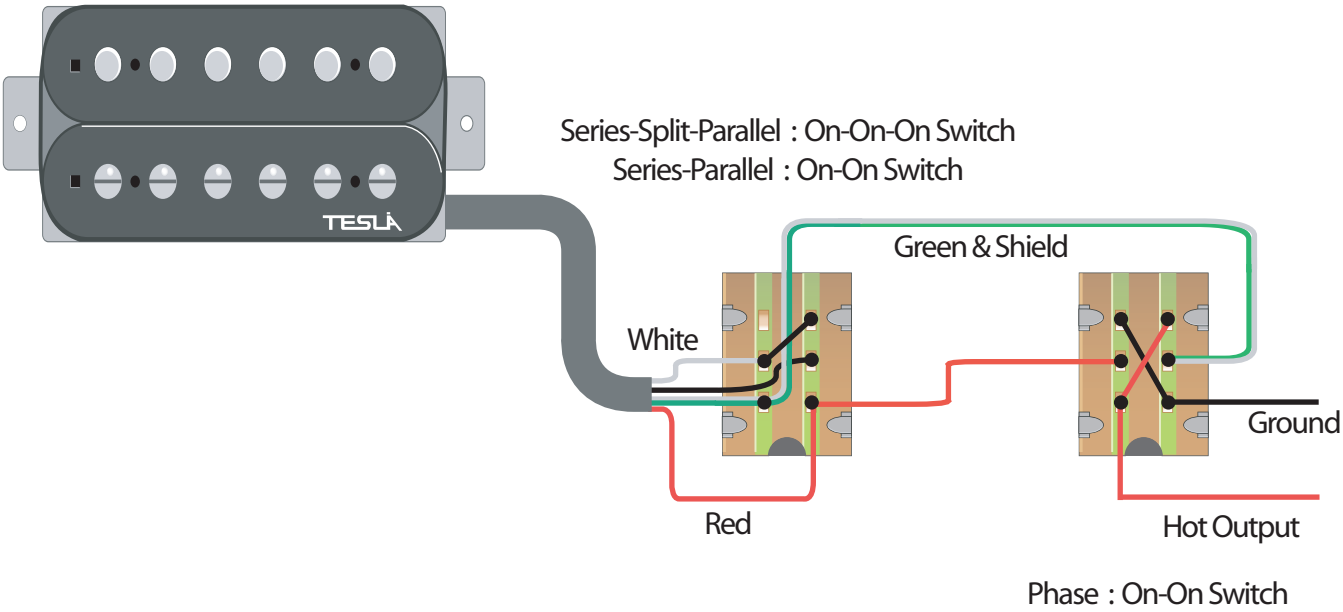

www.teslapickups.com